Code:	WDU-1ASEU-CARB

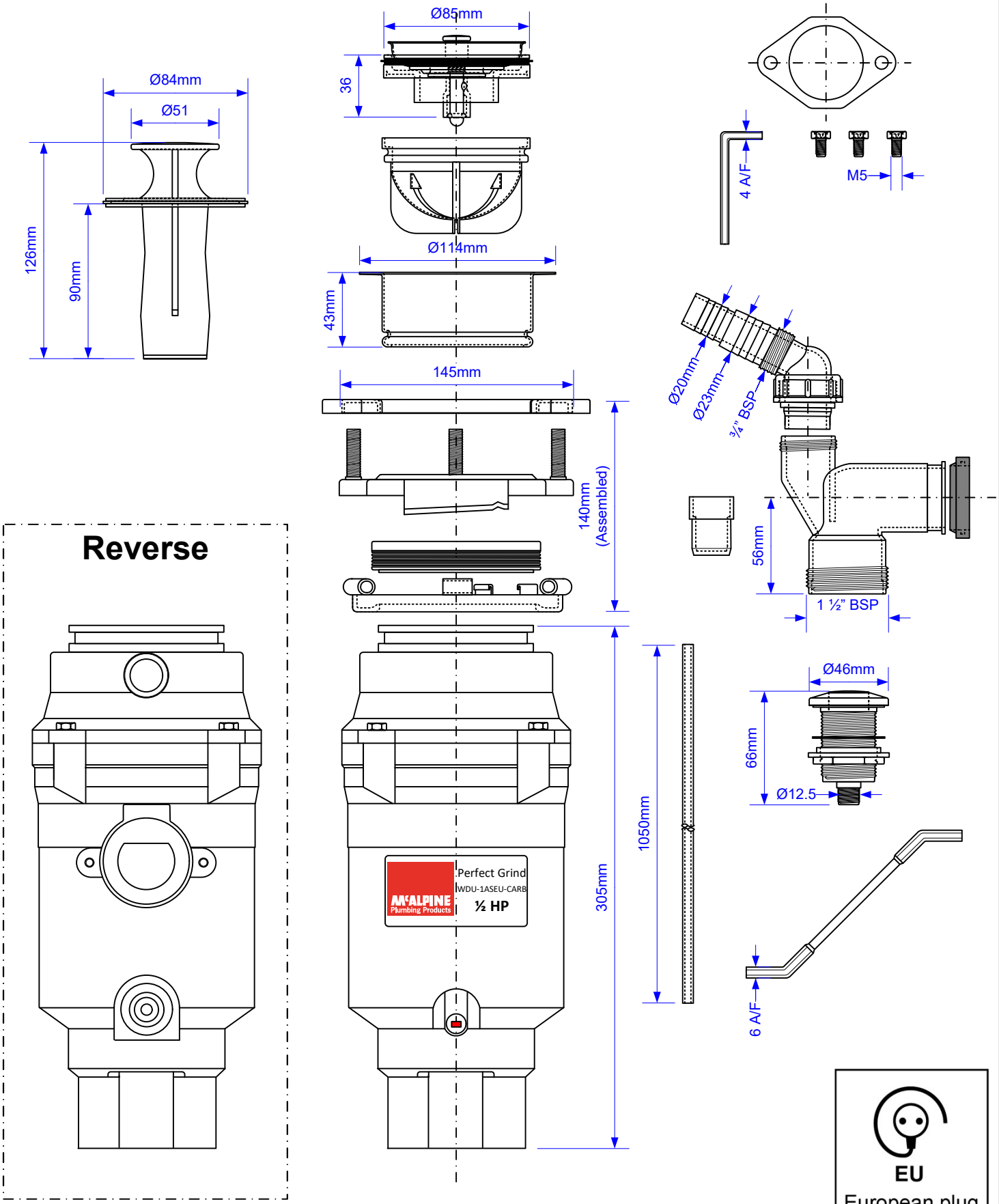

Drawing verified correct as of:	20/01/2025 RM	DRAWN BY RM	REVISED 20/01/2025	FILENAME WDU-1ASEU-CARB.VSDX
			SCALE 1: 3	DATE 20/01/2025